TIMERS

http://setesys.com.br/blog/google-timer/

© Prof. Engº esp Luiz Antonio Vargas Pinto
www.vargasp.com
Revisado em junho de 2023

Timer/Counters

- São 3 os temporizadores/contadores do ATMEGA 328p:
  - Timer/Counter 0 8 bits
  - Timer/Counter 1 16 bits
  - Timer/Counter 2 8 bits
- Isto significa que os contadores de:
  - 8 bits contam até 255
  - 16 bits contam até 65535
- Afinal, são apenas contadores inteiros e unitários

© Prof. Vargas

Características externas

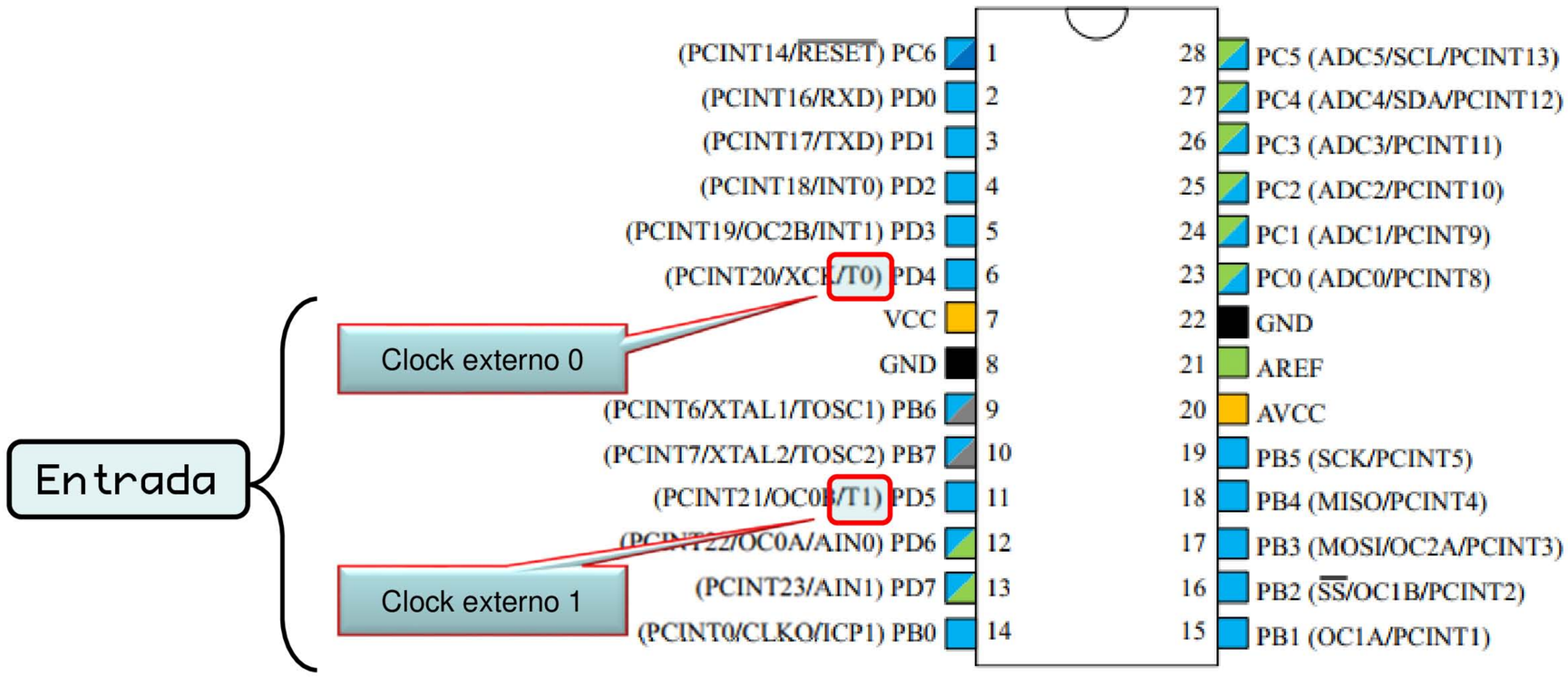

- Observe a ausência de T2

© Prof. Vargas

Cálculo de tempo

8 Bit

$$T_{Seg} = (256 - TCNT0_2) \times \frac{1}{F_{Cristal}} \times Prescaler$$

16 Bit

$$T_{Seg} = (65536 - TCNT1) \times \frac{1}{F_{Cristal}} \times Prescaler$$

Permite alargar o tempo com um multiplicador de até 1024

© Prof. Vargas

Consideração

- T_{Seg} é o tempo gasto em ir da referência até o topo do contador (valor máximo) que será melhor explanado mais adiante.

© Prof. Vargas

O Timer 0

© Prof. Vargas

Preparando o TCNT0

- O TCNT0 é carregado com um valor de 8 bits como referência
- Máximo = 255

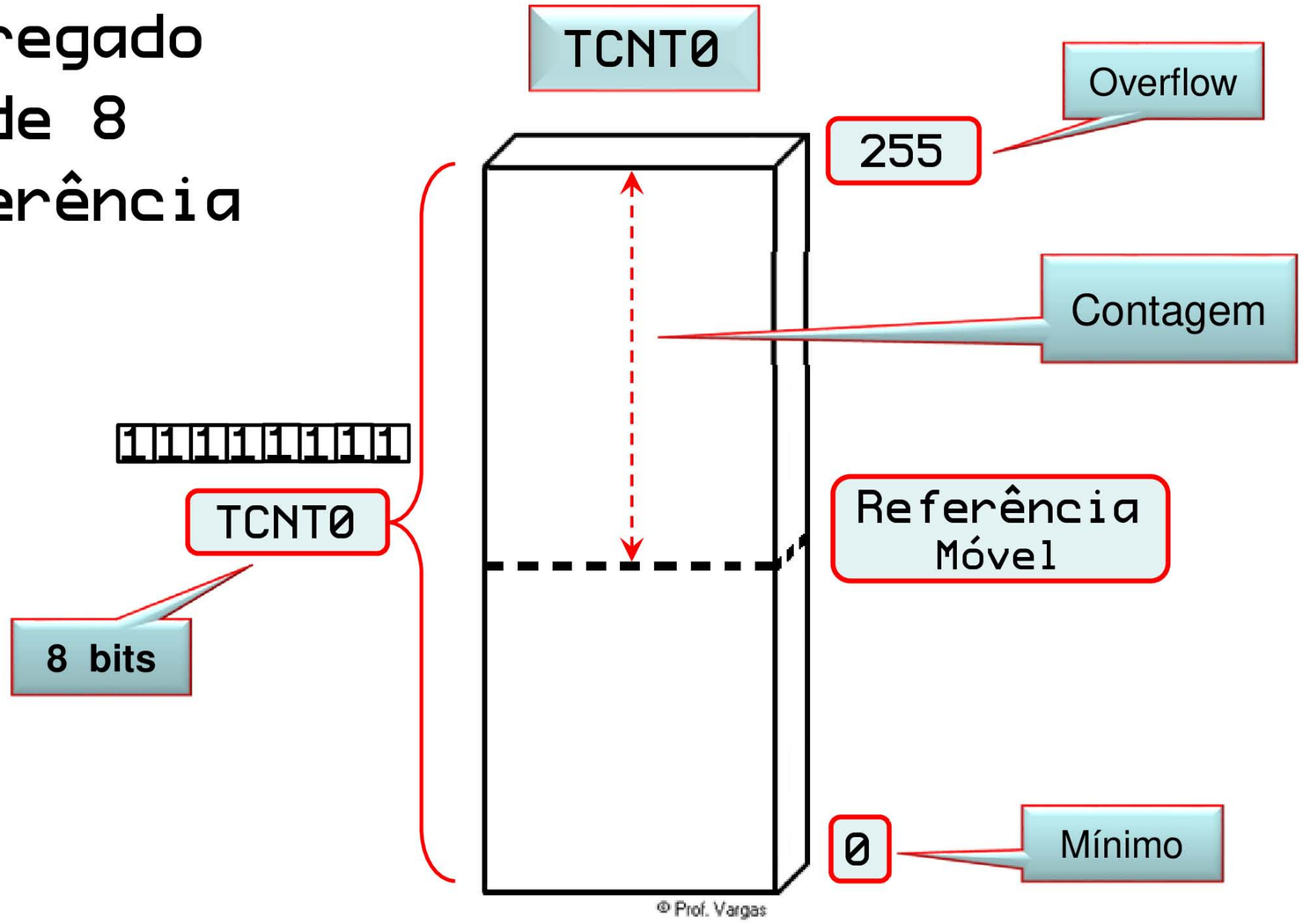

© Prof. Vargas

TCCR0A

Timer Counter Control Register 0 A

0x24 (0x44)	COM0A1	COM0A0	COM0B1	COM0B0	–	–	WGM01	WGM00
Bit	7	6	5	4	3	2	1	0
Initial Value	0	0	0	0	0	0	0	0

COM0A1	COM0A0	Description
0	0	Normal port operation, OC0A disconnected.
0	1	Toggle OC0A on Compare Match.
1	0	Clear OC0A on Compare Match.
1	1	Set OC0A on Compare Match .

© Prof. Vargas

TCCR0B

Timer Counter Control Register 0 B

0x25 (0x45)	FOC0A	FOC0B	–	–	WGM02	CS02	CS01	CS00
Bit	7	6	5	4	3	2	1	0
Initial Value	0	0	0	0	0	0	0	0

Prescaler

CS02	CS01	CS00	Description
0	0	0	No clock source (Timer/Counter stopped).
0	0	1	$clk_{I/O}$/1 (No prescaling)
0	1	0	$clk_{I/O}$/8 (From prescaler)
0	1	1	$clk_{I/O}$/64 (From prescaler)
1	0	0	clkI/O/256 (From prescaler)
1	0	1	$clk_{I/O}$/1024 (From prescaler)
1	1	0	External clock source on T0 pin. Clock on falling edge.
1	1	1	External clock source on T0 pin. Clock on rising edge.

© Prof. Vargas

TIMSK0

Timer Interrupt MaSKable 0

(0x6E)	–	–	–	–	–	OCIE0B	OCIE0A	TOIE0
Bit	7	6	5	4	3	2	1	0
Initial Value	0	0	0	0	0	0	0	0

TOIE0 = 0 Interrupção desabilitada

TOIE0 = 1 Interrupção habilitada

© Prof. Vargas

TIFR0

Timer Interrupt flag Register 0

0x15 (0x35)	–	–	–	–	–	OCF0B	OCF0A	TOV0
Bit	7	6	5	4	3	2	1	0
Initial Value	0	0	0	0	0	0	0	0

TOV0 = 0 Não ocorreu um Overflow

TOV0 = 1 Ocorreu um Overflow

© Prof. Vargas

O Timer 1

© Prof. Vargas

TCNT1

- O TCNT1 é carregado com um valor de 16 bits como referência
- Máximo = 65535

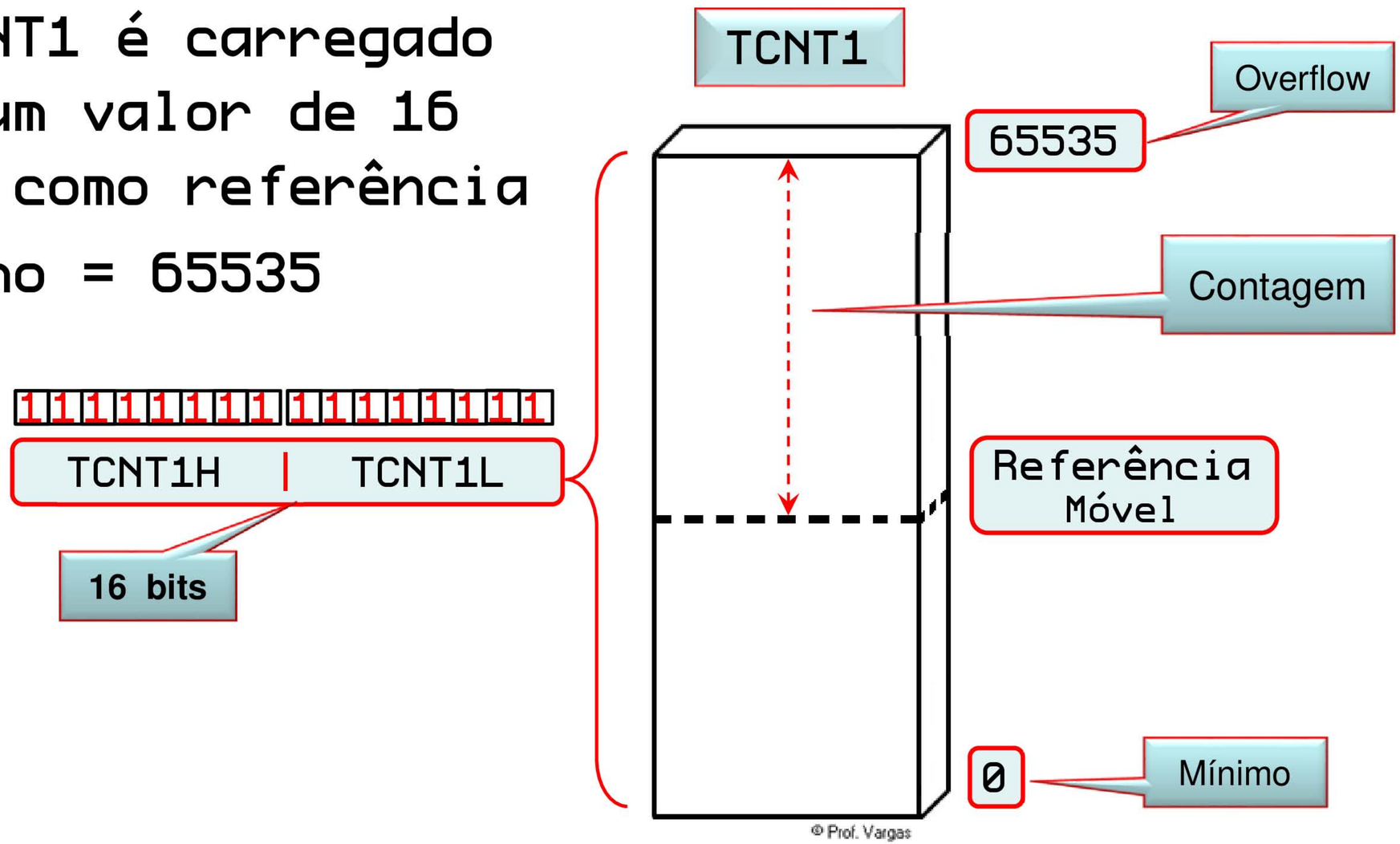

© Prof. Vargas

TCNTI

- O TCNT1 é carregado com 16 bits ⇨ o valor de referência. 2300_{10} (por exemplo) até 65536
- No exemplo com 2300_{10} termos = $08FC_{16}$ ou 08|FC

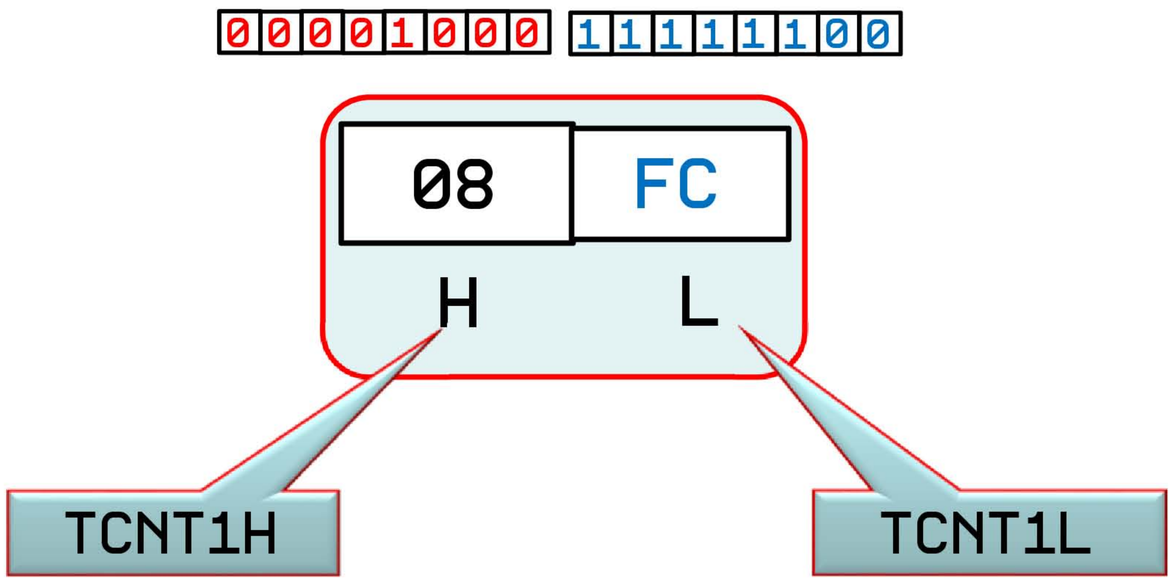

© Prof. Vargas

TCCR1A

Timer Counter Control Register 1 A

(0x80)	COM1A1	COM1A0	COM1B1	COM1B0	–	–	WGM11	WGM10
Bit	7	6	5	4	3	2	1	0
Initial Value	0	0	0	0	0	0	0	0

COM0A1	COM0A0	Description
0	0	Normal port operation, OC0A disconnected.
0	1	Toggle OC0A on Compare Match.
1	0	Clear OC0A on Compare Match.
1	1	Set OC0A on Compare Match .

© Prof. Vargas

TCCRIB

Timer Counter Control Register 1 B

(0x81)	ICNC1	ICES1	–	WGM13	WGM12	CS12	CS11	CS10
Bit	7	6	5	4	3	2	1	0
Initial Value	0	0	0	0	0	0	0	0

Prescaler

CS12	CS11	CS10	Description
0	0	0	No clock source (Timer/Counter stopped).
0		1	$clk_{I/O}/1$ (No prescaling)
0	1	0	$clk_{I/O}/8$ (From prescaler)
0	1	1	$clk_{I/O}/64$ (From prescaler)
1	0	0	clkI/O/256 (From prescaler)
1	0	1	$clk_{I/O}/1024$ (From prescaler)

© Prof. Vargas

TIMSKI

Timer Interrupt MaSKable 1

(0x6F)	–	–	ICIE1	–	–	OCIE1B	OCIE1A	TOIE1
Bit	7	6	5	4	3	2	1	0
Initial Value	0	0	0	0	0	0	0	0

- TOIE1 = 0 Interrupção desabilitada
- TOIE1 = 1 Interrupção habilitada

© Prof. Vargas

TIFR1

Timer Interrupt flag Register 1

0x16 (0x36)	–	–	ICF1	–	–	OCF1B	OCF1A	TOV1
Bit	7	6	5	4	3	2	1	0
Initial Value	0	0	0	0	0	0	0	0

TOV1 = 0 Não ocorreu um Overflow

TOV1 = 1 Ocorreu um Overflow

© Prof. Vargas

O Timer 2

© Prof. Vargas

Timer2 e o TCNT2

- O TCNT2 é carregado com 8 bits ⇨ o valor de referência, 127_{10} (por exemplo) até 255

TCNT2 = 127

© Prof. Vargas

TCCR2A

Timer Counter Control Register 2 A

(0xB0)	COM2A1	COM2A0	COM2B1	COM2B0	–	–	WGM21	WGM20
Bit	7	6	5	4	3	2	1	0
Initial Value	0	0	0	0	0	0	0	0

COM2A1	COM2A0	Description
0	0	Normal port operation, OC0A disconnected.
0	1	Toggle OC2A on compare match
1	0	Clear OC2A on compare match
1	1	Set OC2A on compare match

© Prof. Vargas

TCCR2B

Timer Counter Control Register 2 B

(0xB1)	FOC2A	FOC2B	–	–	WGM22	CS22	CS21	CS20
Bit	7	6	5	4	3	2	1	0
Initial Value	0	0	0	0	0	0	0	0

Prescaler

Escala é diferente dos anteriores

CS22	CS21	CS20	Description
0	0	0	No clock source (Timer/Counter stopped).
0	0	1	clk_{T2S}/(no prescaling)
0	1	0	clk_{T2S}/8 (from prescaler)
0	1	1	clk_{T2S}/32 (from prescaler)
1	0	0	clk_{T2S}/64 (from prescaler)
1	0	1	clk_{T2S}/128 (from prescaler)
1	1	0	clk_{T2S}/256 (from prescaler)
1	1	1	clk_{T2S}/1024 (from prescaler)

© Prof. Vargas

TIMSK2

Timer Interrupt MaSKable 2

(0x70)	–	–	–	–	–	OCIE2B	OCIE2A	TOIE2
Bit	7	6	5	4	3	2	1	0
Initial Value	0	0	0	0	0	0	0	0

- TOIE2 = 0 Interrupção desabilitada
- TOIE2 = 1 Interrupção habilitada

© Prof. Vargas

TIFR2

Timer Interrupt flag Register 2

0x17 (0x37)	–	–	–	–	–	OCF2B	OCF2A	TOV2
Bit	7	6	5	4	3	2	1	0
Initial Value	0	0	0	0	0	0	0	0

TOV2 = 0 Não ocorreu um Overflow

TOV2 = 1 Ocorreu um Overflow

© Prof. Vargas

Até a próxima !

© Prof. Vargas